承 认 书

SPECIFICATION FOR APPROVAL

客户 Customer：	
产品名称 Customer：	NR磁胶屏蔽电感
型号规格 Customer：	N8040
承认书日期 Date：	2025.09.10

确认后签名，并返回一份。
PLEASE RETURN TO US COPY OF " SPECIFICATION FOR APPROVAL " WITH YOUR APPROVED SIGNATURES.

领界电子:	制作(MADE BY)	审核(CHECKED BY)	批准（APPROVED BY）
	杨晓	黄春葵	蔡冰
客户（CUSTOMER）	客户要求（CUSTOMER REQUIRE）: 承认(APPROVED BY):		

揭阳市领界电子有限公司
地址：揭阳市榕城区凤美街道万洋科技众创城7栋6楼
电话：13686801482

CUSTOMER（客户）：	PAGE: 1 OF 6
ITEM: NR8040	Customer's ITEM:

1. SHAPES AND DIMENSIONS 外形尺寸 (Unit:mm)

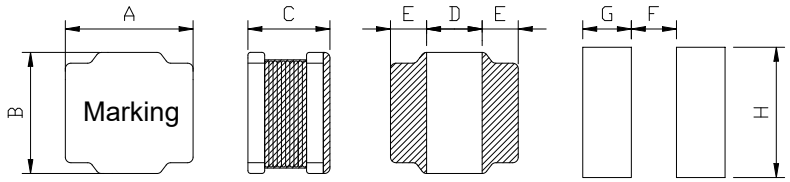

Recommended patterns

TYPE(型号)	A	B	C	D	E	F	G	H
NR252012	2.0±0.2	2.5±0.2	1.25Max	0.8±0.3	0.9±0.3	0.6	1.1	2.0
NR3015	3.0±0.2	3.0±0.2	1.7Max	1.2±0.3	0.9±0.3	1.1	1.0	2.7
NR4018	4.0±0.2	4.0±0.2	1.8Max	1.6±0.3	1.2±0.3	1.4	1.3	3.77
NR4030	4.0±0.2	4.0±0.2	3.0Max	1.3±0.3	1.35±0.3	1.2	1.4	3.7
NR5020	5.0±0.2	5.0±0.2	2.1Max	1.4±0.3	1.8±0.3	1.2	1.9	4.2
NR5040	5.0±0.2	5.0±0.2	4.0Max	1.6±0.3	1.7±0.3	1.4	1.8	4.2
NR6045	6.0±0.3	6.0±0.2	4.7Max	2.3±0.3	1.85±0.3	2.4	1.8	5.7
NR8040	8.0±0.3	8.0±0.2	4.2Max	3.8±0.3	2.1±0.3	3.6	2.2	7.5

2.Features（特性）：

1. Small and very Thin inductor 小型,超薄电感器
2. Magnetic-resin shielded conruction reduces buzz noise to ultra-low
   磁性胶水涂敷结构极大减少了蜂鸣声
3. Takes up less PCB real estate and save more power 省空间,更省电

3.APPLICATIONS （用途）

1. LED Lighting LED 照明
2. Automotive systems 汽车产品
3. Notebooks,desktop computers,servers,graphic cards 笔记本电脑，台式电脑，服务器，显卡

CUSTOMER（客户）：					PAGE: 2 OF 6
ITEM: NR8040			Customer's ITEM:		
Part number	NDUCTANCE (μH) 电感值	DCR（±30%）（Ω）	Irms（Max.）（A）	Ista（Max.）（A）	S.R.F.（Min.）（MHz）
	100KHz/1V	直流电阻	额定电流	饱和电流	自谐频率
8040-1.0uH/N	1.00±30%	0.008	6.30	9.85	89
8040-1.5uH/N	1.50±30%	0.010	5.65	8.15	67
8040-2.2uH/N	2.20±30%	0.012	5.15	7.10	41
8040-3.3uH/M	3.30±20%	0.017	4.40	6.50	27
8040-4.7uH/M	4.70±20%	0.019	4.10	5.90	24
8040-6.8uH/M	6.80±20%	0.024	3.60	4.55	20
8040-10uH/M	10.00±20%	0.042	3.30	3.60	15
8040-15uH/M	15.00±20%	0.047	2.60	2.95	12
8040-22uH/M	22.00±20%	0.069	2.10	2.40	9.5
8040-33uH/M	33.00±20%	0.097	1.80	2.05	7.8
8040-47uH/M	47.00±20%	0.136	1.55	1.75	6.4
8040-68uH/M	68.00±20%	0.196	1.25	1.45	4.9
8040-100uH/M	100.00±20%	0.290	1.00	1.15	4.2
8040-150uH/M	150.00±20%	0.410	0.85	1.10	3.5
8040-220uH/M	220.00±20%	0.599	0.80	0.85	3.5
8040-330uH/M	330.00±20%	0.889	0.64	0.68	2.8
8040-470uH/M	470.00±20%	1.260	0.54	0.60	2.1
8040-680uH/M	680.00±20%	2.040	0.45	0.50	1.7
8040-1mH/M	1000.00±20%	2.800	0.35	0.40	1.4

4. Electrical Characteristics 电气特性

(1) Inductance Tested at 100kHz,1Vrms (20℃)

所有的测试数据在20℃的环境温度下进行.

(2) Isat: DC current at which the inductance drops

电感:在该直流电流下，电感值下降到零的点.

(3) Irms: DC current that causes the temperature rise (△T)

Irms:导致温度上升(AT)的直流电流

(4) Operating Temperature : -25℃ ~ +125℃

工作温度:-25℃~+125℃C

CUSTOMER（客户）:	PAGE: 3 OF 6
ITEM: NR8040	Customer's ITEM:

5. Material List 材料清单

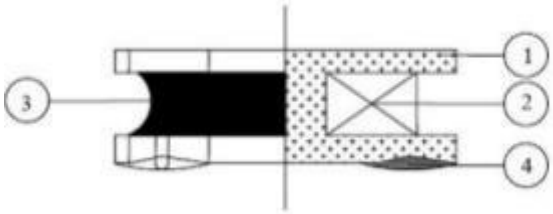

No.	PARTS	MATERIAL SPECIFICATIONS	UL FILE NO.	TEMP CLASS
1	CORE	N251H SDR-4.0-2.75-2.0-1.4S-P2 OR EQUIVALENT	NA	NA
2	WIRE	G1 P180 OR EQUIVALENT	E258243	180℃
3	ADHESIVE	E-500AH（胶水）+ FSC4(合金粉) OR EQUIVALENT	NA	NA
4	SOLDER	Sn99.3%-Cu0.7% OR EQUIVALENT	NA	NA

***NA:NOT APPLICABLE**

6. Storage conditions/Matters need attention 储存条件/注意的事项

(1). 贮存温度和工作温度:

Operating temperature rang and Storage termperature rang:-40 ℃ to +125℃

(2) .额定电流：指使电感量比初始值下降30%Max或电感器表面温度上升 ≦40℃的电流值，以较小者为准（参考 周围环境温度25℃)

The rated DC current is that which cause at 30%Max inductance reduction from the initial value or inductor surface temperature to rise by ≦40℃, whichever is smaller (Reference ambient temperature 25℃)

(3) 产品在6个月内使用(注意:产品一经拆开包装,须尽快使用)

Products should be used within 6 months. (Note that the product should be used as soon as possible once it is folded)

(4). 包装材料应保存在空气中不存在氯或硫的地方

The packaging material should be kept where no chlorine or sulfur exists in the air

(5). 不要用手指触摸电极(焊接端子), 因为这可能导致焊接能力的下降

Do not touch the electrodes (soldering terminals) with fingers as this may lead to deterioration of solder ability.

(6) . 个别零件强烈建议使用镊子或真空取料机，散装搬运应确保尽量减少磨损和机械冲击

The use of tweezers or vacuum pick-ups is strongly recommended for individual components.Bulk handling should ensure that abrasion and mechanical shock are minimized.

CUSTOMER（客户）：	PAGE: 4 OF 6
ITEM: NR8040	Customer's ITEM:

7.Packing Information 包装

(1). Tape&Reel Dimension 载带及卷轴尺寸:

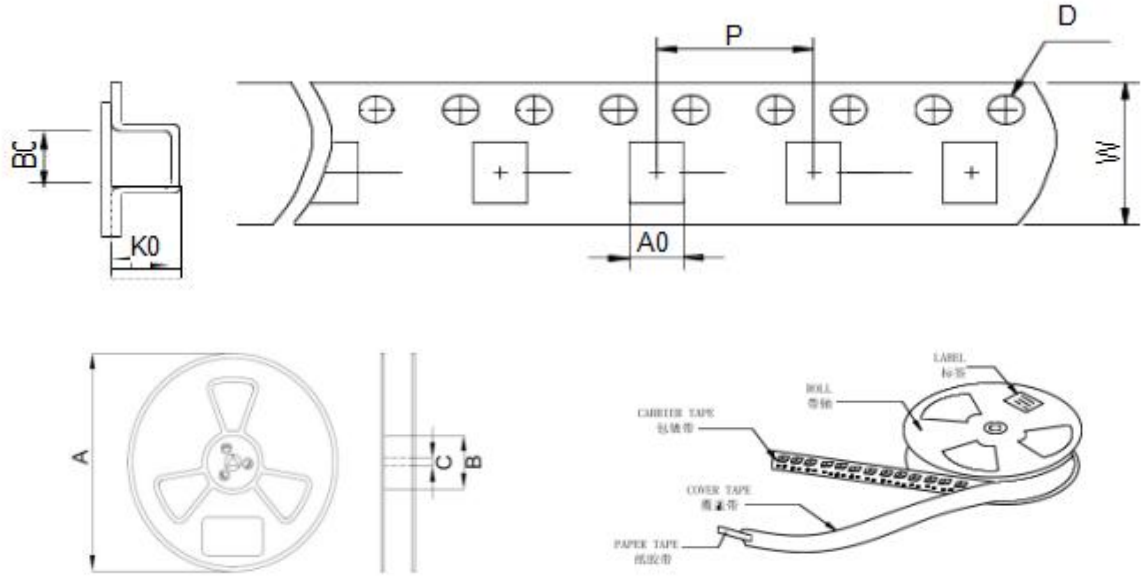

Type	Tape Dimension（mm）						Reel Dimension（mm）			Quantity（Pcs/Reel）
	W	A0	B0	K0	D	P	A	B	C	
252012	8	2.35	2.65	1.6	1.5	4	178	58	13	2000
3015	8	3.3	3.3	1.6	1.5	4	178	58	13	2000
4018	12	4.3	4.3	2.2	1.5	8	330	100	13	3000
4020	12	4.3	4.3	2.4	1.5	8	330	100	13	2000
4030	12	4.3	4.3	3.4	1.5	8	330	100	13	2000
5040	12	5.4	5.4	4.4	1.5	8	330	100	13	1500
6045	16	6.4	6.4	4.8	1.5	8	330	100	13	1500
8040	16	8.4	8.4	4.4	1.5	12	330	100	13	1000

(2). Peeling required剥离强度要求:

①F 力大小：20～100g；

②面带剥离角度：165°~180°。

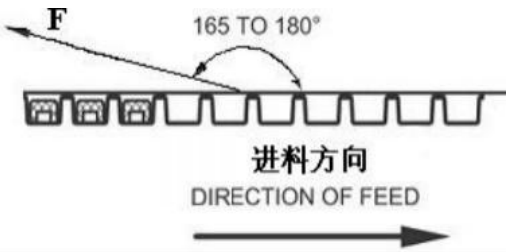

CUSTOMER（客户）:	PAGE: 5 OF 6
ITEM:NR8040	Customer's ITEM:

7.Packing Information 包装

(3). Packing Dimension and quantity 包装尺寸和数量:

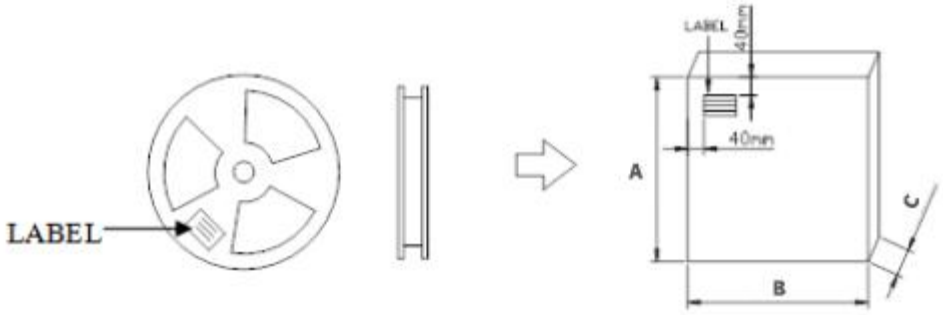

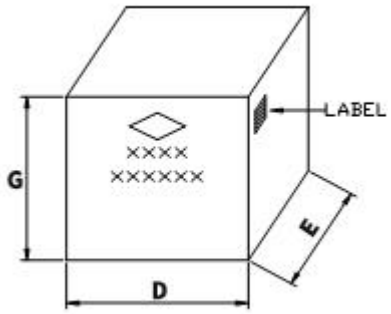

Item	Inner box size/cm			Outer box size/cm			Quantity/pcs		
	B	C	A	D	E	G	1Reel	Box	Carton
252012	18.5	12	18.5	38	20	21	2000	20000	60000
3015	18.5	12	18.5	38	20	21	2000	20000	60000
4018	34	34	5.2	37	37	30	3000	12000	48000
4020	34	34	5.2	37	37	30	2000	6000	24000
4030	34	34	5.2	37	37	30	2000	6000	24000
5040	34	34	5.2	37	37	30	1500	4500	18000
6045	34	34	5.2	37	37	30	1500	4500	18000
8040	34	34	5.2	37	37	30	1000	3000	12000

CUSTOMER（客户）:	PAGE: 6 OF 6
ITEM:NR8040	Customer's ITEM:

8.Enviroment Characteristics 环境特性

项目/Item	SPECIFICATON（规格说明）	
High temperature storage	△L/Lo≦±5% There shall be no mechanical damage.	The sample shall be left for 500hours in an atmospere with a temperature of 125±2℃ and a normal humidity. Upon completion of the measurement shall be made after the sample has been left in a normal temperature and normal humidity for 1 hour.
Low temperature storage	△L/Lo≦±5% There shall be no mechanical damage.	The sample shall be left for 500hours in an atmospere with a temperature of -40±3℃ and a normal humidity. Upon completion of the measurement shall be made after the sample has been left in a normal temperature and normal humidity for 1 hour.
Change of temperature	△L/Lo≦±5% There shall be no other damage of problems.	The sample shall be subject to 5 continuos cycles, such as shown in the table 2 below and then it shall be subjected to standar stmospheric conditions for 1 hour, after which measurement shall be made. Table2
Moisuture storage	△L/Lo≦±5% There shall be no mechanical damage.	The sample shall be left for 500 hours in a temperature of 40±2℃ and a humidity(RH) of 90~ 95%Upon completion of the test, the measurement shall be made after the sample has been left in a normal temperature and normal humidity more than 1 hour.

	Temperature	Duration
1	-40±3℃ (Themostat No.1)	10 min.
2	Standard atmospheric	5 sec. or less No.1→No.2
3	125±2℃ (Themostat No.2)	30 min.
4	Standard atmospheric	5 sec. or less No.2→No.1

Test conditions：The sample shall be reflow soldered onto the printed circuit board in every test.